HC Series — 3.5 kV Relays

HC-1
No Load Switching

HC-3
Make & Break Load Switching

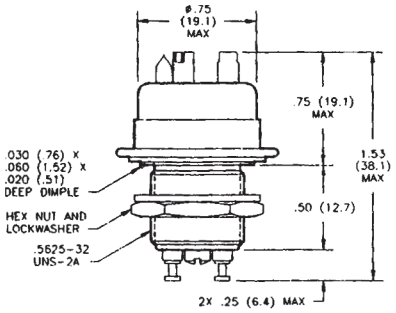

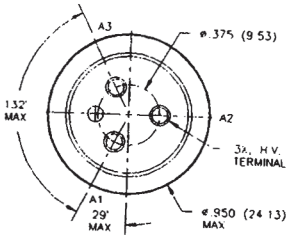

Product Facts for HC-1

- **Widely used for RF applications**
- **Vacuum dielectric for low leakage current applications**
- **Copper contacts for high current capability**
- **Not designed for power switching**
- **Meets requirements of MIL-R-83725**
- **QPL version available, M83725/5-001**

Product Facts for HC-3

- **Tungsten contacts for long life when power switching**
- **Vacuum dielectric for power switching low current loads**

For factory-direct application assistance, dial 800-253-4560, ext. 2055, or 805-220-2055.

HC-5
Make Only Load Switching

Product Facts for HC-5

- **Gas-filled for "make only" power switching**
- **SF-6 gas-filled for capacitive discharge applications**
- **Tungsten contacts for long life when power switching**

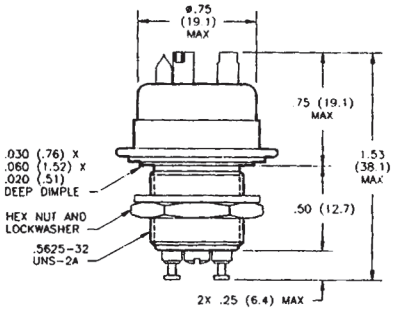

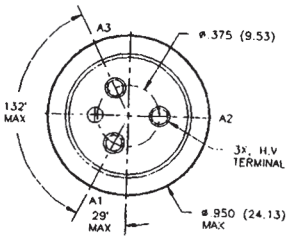

Product Specifications for HC-1, HC-3 and HC-5

Contact Arrangement — SPDT

Contact Form — C

Test Voltage, DC or 60 Hz (Peak) — 5 kV

Rated Operating Voltage (Peak) —
DC or 60 Hz — 3.5 kV
2.5 MHz — 2.5 kV
16 MHz — 2 kV
32 MHz — 1.5 kV

Continuous Carry Current, Max. —
DC or 60 Hz — HC-1 — 25 A
HC-3 — 18 A
HC-5 — 8 A
2.5 MHz — HC-1 — 14 A

16 MHz — HC-1 — 9 A

32 MHz — HC-1 — 7 A

Coil Hi-Pot (Vrms, 60 Hz) — 500 A

Contact Capacitance —
Between Open Contacts —
HC-1 —2 pF

Open Contacts to Ground —
HC-1 —2.5 pF

Contact Resistance, Max. —
HC-1 — 0.01 ohm
HC-3 — 0.02 ohm
HC-5 — 0.50 ohm*

Operate Time, Max. — 6 ms

Release Time, Max. — 6 ms

Shock, 11ms, 1/2 Sine (Peak) — 50 g

Vibration —
Peak — 10 g (55 to 2000 Hz)

Operating Ambient Temperature Range — -55°C to +125°C

Mechanical Life —
HC-1, HC-3 — 2 million cycles
HC-5 — 1 million cycles

Weight, Nominal —
28.35 g (1.0 oz.)

Note:
*Contact resistance for gas-filled relays is measured at 28 Vdc, 1 Amp

Coil Data

Nominal Volts DC	12 Vdc	26.5 Vdc	115 Vdc
Pickup, Max.	8 Vdc	16 Vdc	80 Vdc
Dropout	.5-5 Vdc	1-10 Vdc	5-50 Vdc
Coil Resistance (±10%)	80 Ω	335 Ω	6000 Ω

Ratings listed are for 25°C, sea level conditions

Ordering Information

Sample Part Number ▶ **HC- 1 /12Vdc**

Series:

Model:
1
3
5

Coil Voltage:
Blank = 26.5 Vdc
/12Vdc = 12 Vdc
/115Vdc = 115 Vdc

Catalog 5-1773450-5
Revised 3-13

www.te.com

Dimensions are shown for reference purposes only. Specifications subject to change.

Dimensions are in millimeters unless otherwise specified.

USA: +1 800 522 6752
Asia Pacific: +86 0 400 820 6015
UK: +44 800 267 666

For additional support numbers please visit www.te.com